REVISIONS			
REV.	DESCRIPTION	DATE	APPROVED
A	RELEASE	1/5/2007	
B	ECN 200342ECNA	3/15/2007	

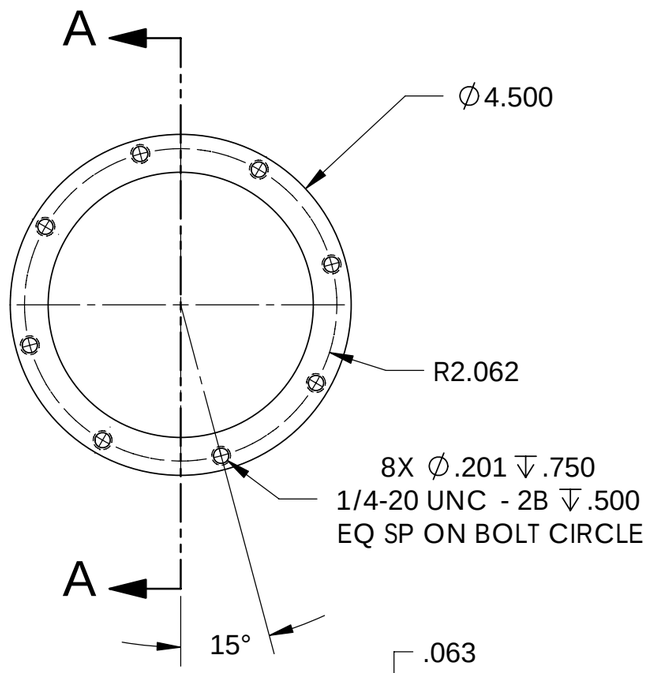

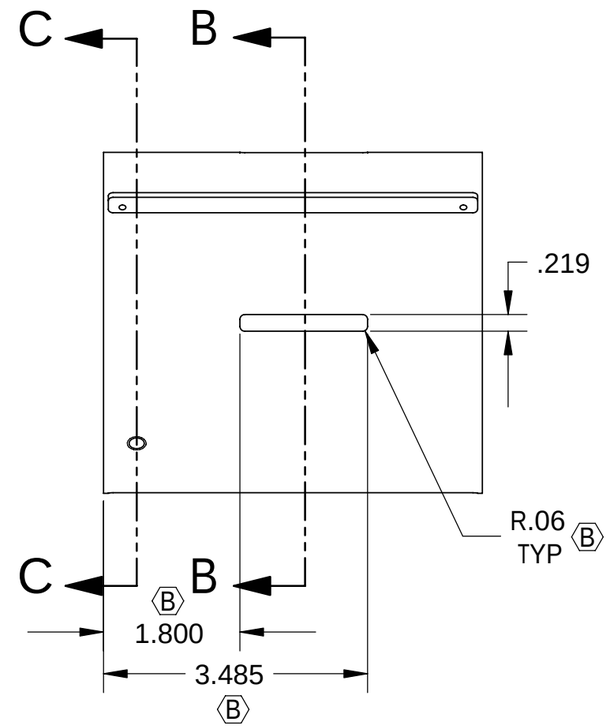

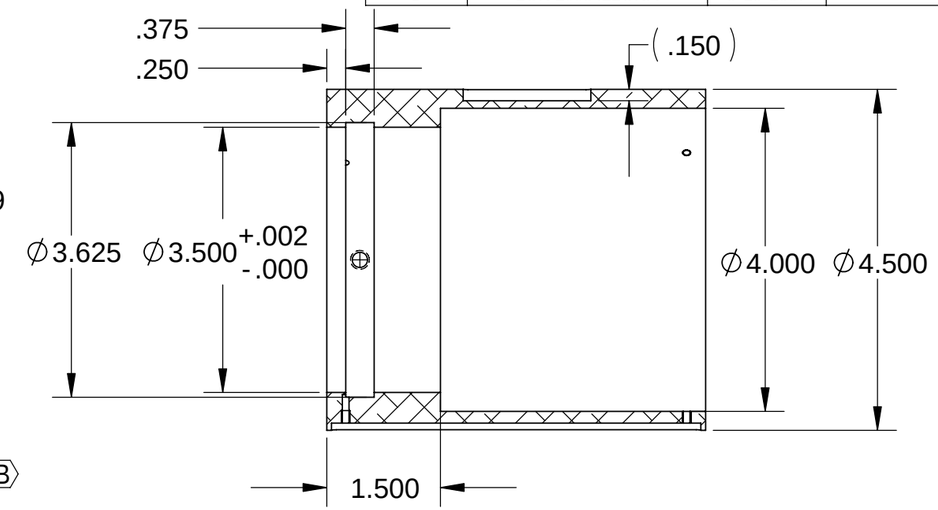

SECTION A-A

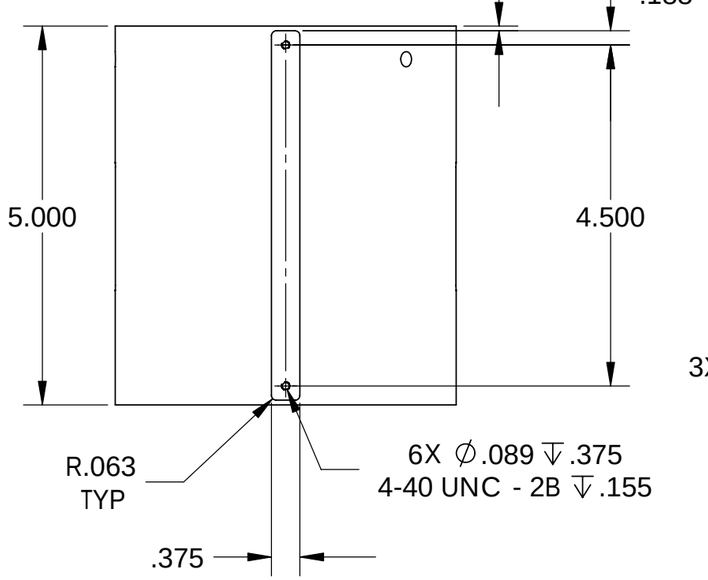

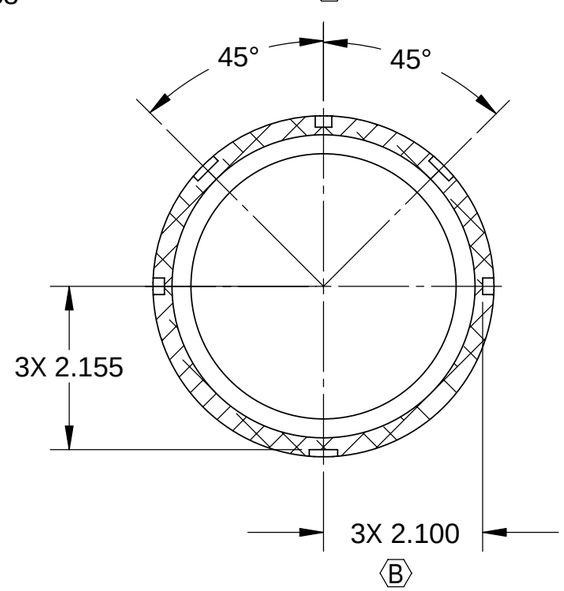

SECTION B-B

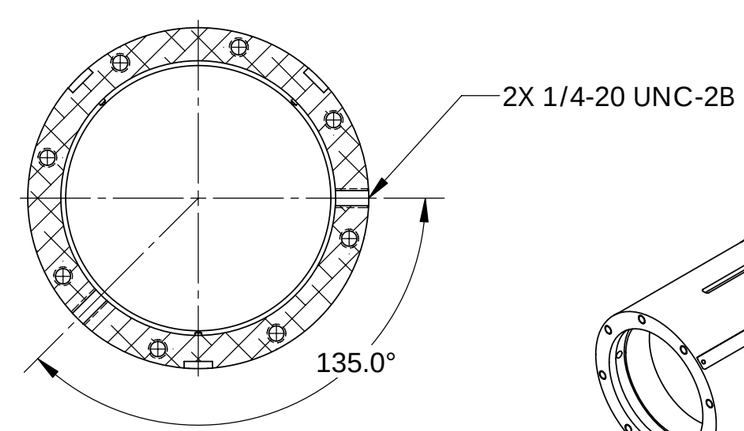

SECTION C-C

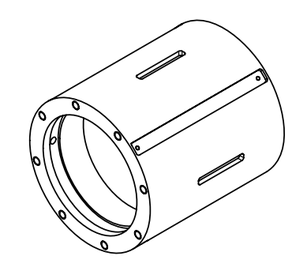

NOTES:

1. REMOVE ALL SHARP EDGES.
2. FINISH: SATIN BLACK ANODIZE PER MIL-A-8625, TYPE II, CLASS 2

PROPRIETARY AND CONFIDENTIAL
THE INFORMATION CONTAINED IN THIS DRAWING IS THE SOLE PROPERTY OF PLANEWAVE INSTRUMENTS. ANY REPRODUCTION IN PART OR AS A WHOLE WITHOUT THE WRITTEN PERMISSION OF PLANEWAVE INSTRUMENTS IS PROHIBITED.

UNLESS OTHERWISE SPECIFIED TOLERANCES

DECIMAL DIM
.XXXX±.0005
.XXX±.005
.XX±.02

ANGULAR DIM
MACHINED ±0° 30'
LOCATING ±0° 30'
FORMED ±1°
CHAMFERS ±5°

SURFACE FINISH 63
MAX R 0.015

BREAK ALL SHARP EDGES & REMOVE BURRS.

	NAME	DATE
DRAWN	W. ZHOU	1/5/2007
CHECKED		
ENG APPR.		

MATERIAL: 6061-T6 AL ALLOY

FINISH: SEE NOTE

PLANEWAVE Instruments

TITLE: TUBE, FOCUSER DRAW

SIZE B | DWG. NO. 200342 | REV. B

SCALE:1:2 | CAD FILE: 200342B | SHEET 1 OF 1