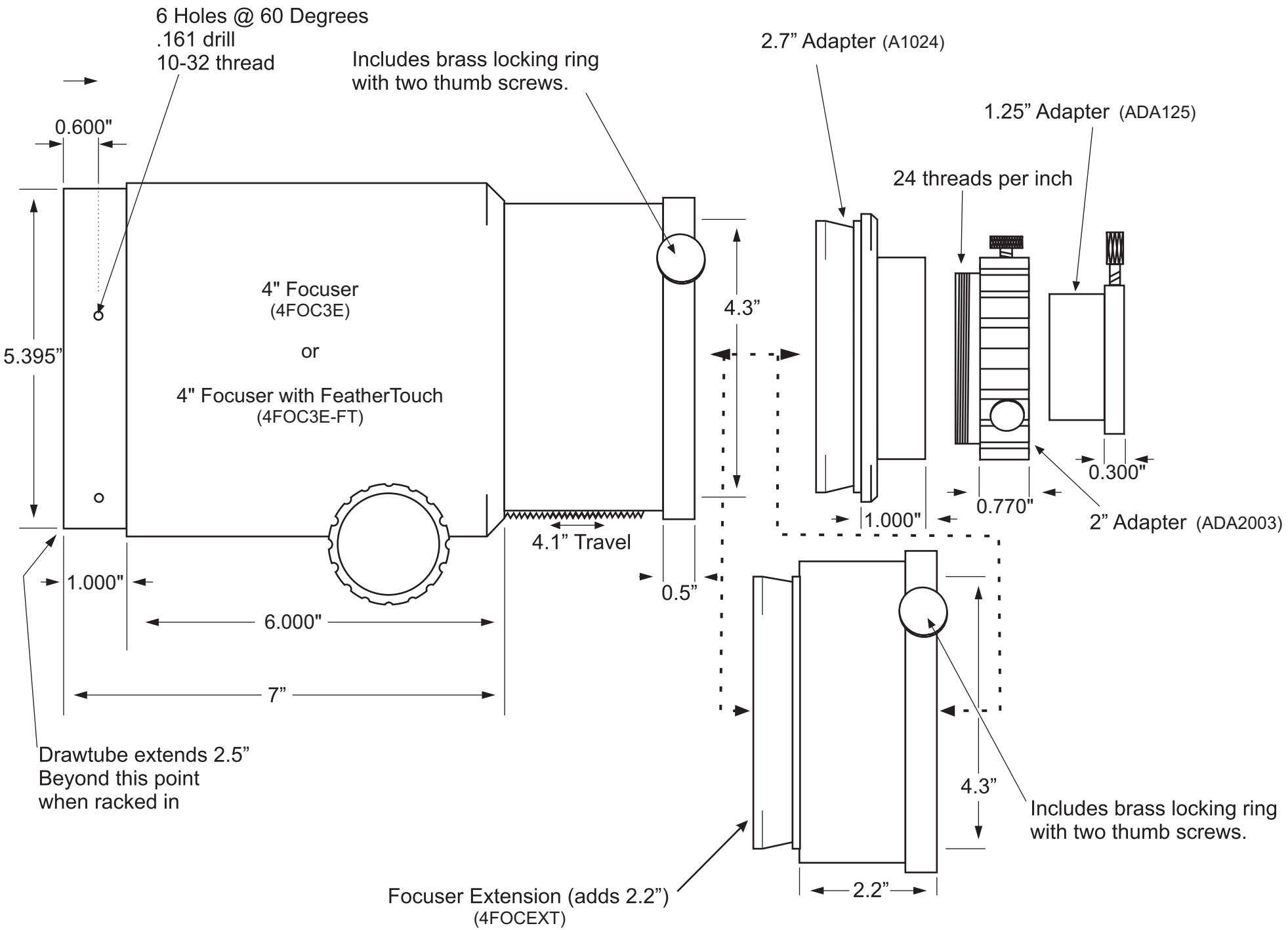
6 Holes @ 60 Degrees
.161 drill
10-32 thread
Includes brass locking ring
with two thumb screws.
2.7” Adapter (A1024)
1.25” Adapter (ADA125)
24 threads per inch
0.600"
5.395”
4" Focuser
(4FOC3E)
or
4" Focuser with FeatherTouch
(4FOC3E-FT)
4.3”
4.1” Travel
0.5”
1.000"
6.000"
7”
1.000"
0.770"
0.300"
2” Adapter (ADA2003)
Drawtube extends 2.5”
Beyond this point
when racked in
4.3”
Includes brass locking ring
with two thumb screws.
2.2”
Focuser Extension (adds 2.2”)
(4FOCEXT)